XRT-A Manual

Content

1. General notes

Important
Before using the XRT-A for the first time, please read this manual carefully. This manual contains additional information on handling and care. Do not apply more than 1 N force on the rotor as this can lead to a damaged stage.

Cleaning
Do not use any unsuitable cleaning agents, chemicals, grease/oil or techniques for cleaning. This could damage the surfaces and products could be contaminated by abraded particles. For vacuum and cleanroom applications, gloves are required to avoid contamination of the device during unpacking and installing the device.

Servicing
Repairs may only be carried out by Xeryon's trained service technicians. Only original Xeryon's spare parts may be used.

Authorised personnel
Please ensure that the XRT-A is installed and operated by authorized and trained personnel. All operators must have read and understood this user manual, and in particular the safety regulations.

Place of use
Avoid large temperature fluctuations, vibrations and shocks. These conditions can distort measurements and can even lead to a damaged stage.

Humidity and dust
Keep relative humidity limited to max. 80%. A higher relative humidity will damage the piezos inside the stage. Keep the stage away from dust. Excessive dust may affect the integrated bearings.

Storage and transport
Use the original packaging for shipping or transporting the XRT-A. In order to prevent damage from vibrations and shocks, pack and lock all moving parts (according to this manual) in their original packaging and ship it appropriately. Store and transport the XRT-A in a closed container or plastic bag, free of dust and humidity. Add desiccant bag in closed container. Avoid excessive vibrations during transport. Storage temperature: 0 to +40 °C.

Environment & health
The external surfaces of the device do not contain hazardous materials for human health or the environment. Inside the device however, PZT is present. The electronics are RoHs compatible.

Do not throw in the garbage bin. Dispose of in a responsible matter, according to local legal regulations

Symbols used

Warning of hazardous electrical voltage
The XRT-A is operated with a voltage of maximum 48 V DC. Failure to comply can cause:
- Hazards to personnel (electric shock).
- Functional disturbances or damaged stage

2. Introduction

Congratulations on purchasing the XRT-A rotation stage. The XRT-A is designed for the rotation of small loads (max. 100 gram) with a high accuracy and repeatability. The XRT-A is comprised of piezoelectric actuators and an accurate optical encoder. This allows a closed loop control of small samples with high accuracy and a long term stability.

The XRT-A, shown in Fig. 1, is a high-precision piezo-driven rotation table which can be used in a wide range of applications. It provides unlimited bidirectional rotation. The integrated bearing function and active error motion compensation guarantees submicron radial error motion in the longitudinal direction of the stage. The integrated optical encoder provides 6.25 millidegrees angular resolution (57600 positions/turn).

The XRT-A-NM is made from non-magnetic materials such as aluminium alloys, copper alloys, stainless steel 316L and ceramics. As a result, it is not influenced by strong static or low-frequency magnetic fields and also does not produce magnetic fields in itself.

The XRT-A can operate in 2 different modes: stick slip and direct mode. The XRT-A's primary operating principle is stick-slip (i.e. for rotating the rotor). The direct mode, on the other hand, can be used to reduce the radial error motion of the stage in the direction of compensation (i.e. the longitudinal direction of the stage).

<u>Remark:</u> do not load the rotor with a mass or force higher than 1 N. This will damage the stage and lead to a bigger error motion. The rotor can carefully be rotated manually without harming the device.

Figure 1: XRT-A.

The XRT-A is equipped with a male D-sub 15 HD connector for connection with the XD-S driver of Xeryon. The pin layout of the XRT-A is described in the table below.

PIN #	SIGNAL	PIN #	SIGNAL
1	/	9	/
2	Encoder power (5V)	10	Ground piezo 1 & 2
3	Encoder ground	11	/
4	Piezo 2	12	/
5	Piezo 1	13	/
6	Index	14	/
7	A	15	/
8	B		

Table 1: Pin layout D-sub 15 HD connector

Remark:

Be careful to avoid that the voltage intended for the piezo is applied to any of the encoder wires as this will almost certainly destroy the encoder. The piezo acts as an electrical capacitor and can hold a substantial charge. Discharge the piezo using a suitable resistor.

3. Installation

1. Unpack the stage carefully.

2. Put the stage at a clean and flat surface. Avoid any shock on the stage. The mounting surface must have a flatness ≤ 0.05 mm to ensure a proper functioning and to prevent damage to the stage.

3. Fix the stage on the mounting surface via the four mounting holes at the corners of the stage (M1.6 bolts). The stage must be fixed to a sufficiently large mass or fixed rigidly to the environment to ensure proper function of the motor. The stage can be used in any orientation. However, the limited torque limits mass imbalance when the rotation axis is not vertical.

4. Mount the sample or object on the rotor. Avoid any shock or load higher than 1 N on the stage as this can cause irreparable damage. Fix the sample to the rotor using the four M2 screw holes. Overcome excessive forces on the stage while screwing the bolts.

<u>Remark:</u> screws (4x M2) may not be inserted deeper than 2.5 mm into the rotor. Screwing them deeper may damage the encoder.

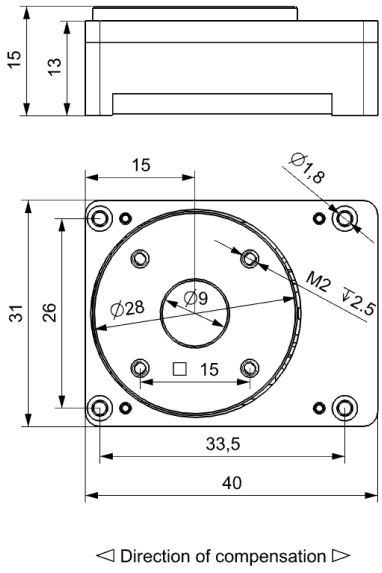

5. Connect the connector on the stage to the stage connector on the back panel of the XD-S piezo driver of Xeryon.

6. To control the XRT-A, connect a USB cable or RS-232 cable to the corresponding port on the XD-S piezo driver and the computer.

7. Connect the power cord to a grounded socket and the corresponding port on the XD-S piezo driver.

<u>Remark:</u>
It is recommended to use the XD-S for driving the XRT-A. If the XRT-A is driven with any other driver, Xeryon cannot guarantee a proper functioning and cannot be held responsible for any damage caused to the stage.

4. Setup

1. Switch on the XD-S driver using the on/off button (green button at the front panel). The green LED will blink when the driver is powered.

2. Start the windows interface “Xeryon_Dialog.exe”. The windows interface will look like the figure below[1].

3. Select “Search port number” to find the port number that connects your computer with the driver.

4. Enter the port number in the text box next to the button “Connect to port”.

5. Click “Connect to port”. The green LED “Connected to driver” should light up now. When the LED does not light up it means that the computer is not connected with the driver. In this case, one cannot go to the next step. Please reconnect the computer with the driver and repeat the steps described above until the green LED “Connected to driver” lights up.

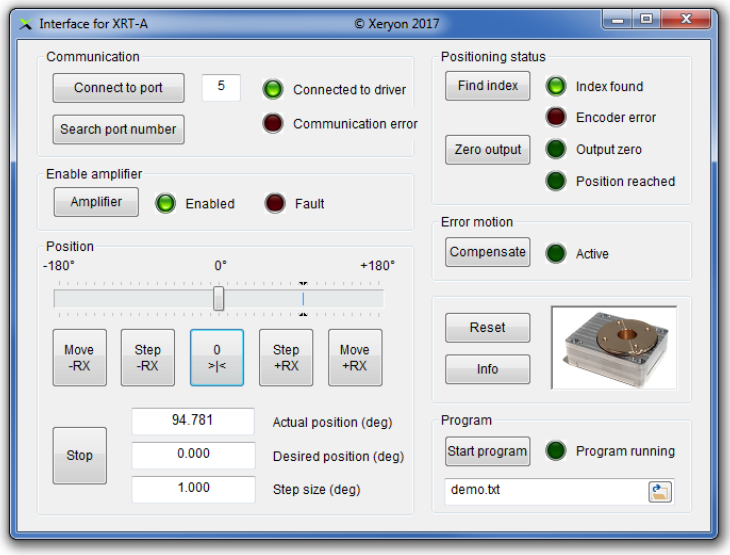

6. Click on the button “Amplifier”. The green LED “Enabled” should light up now.

7. Click “Find index” or “Move -RX” or “Move +RX” to find the index. The stage will automatically search and stop on the index position when one clicks on the “Find index” button. The stage will continously rotate, on the other hand, when one clicks on “Move -RX” or “Move +RX”. The green LED “Index found” will light up when the index is found.

8. The driver and stage are now configured and ready to use.

Remark: the stage is driven by a saw-tooth voltage signal. The speed can be changed by altering the frequency between 0 and 2.5 kHz and/or the voltage of the saw-tooth signal.

[1] Some of the buttons may be disabled when you start the windows interface. Please follow the next steps to configure the driver. This will enable all buttons.

Function of buttons and status displays:

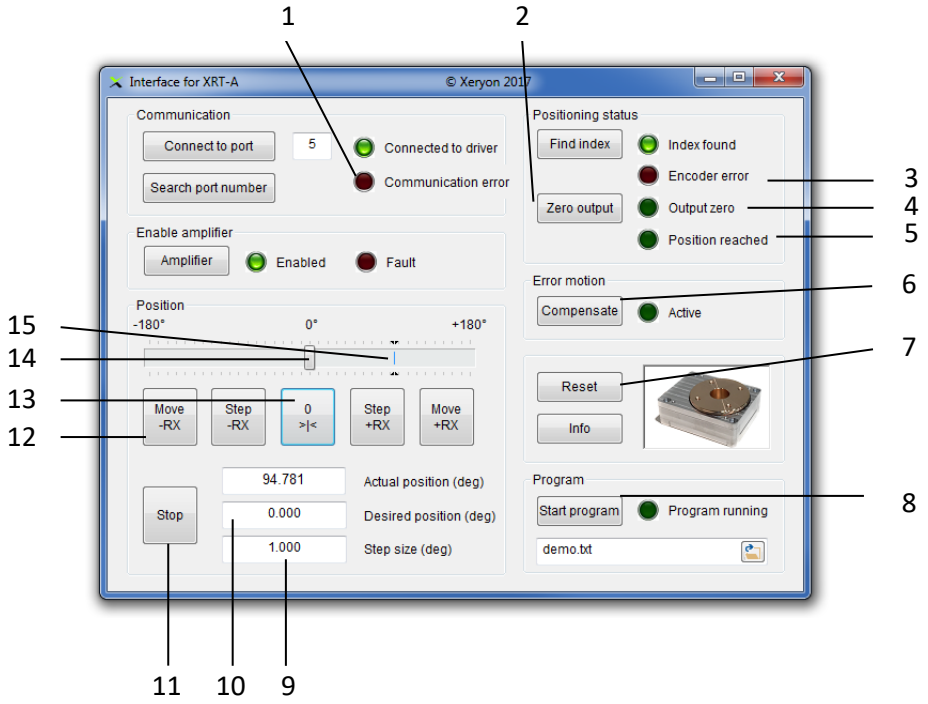

1	Communication error between the computer and driver.
2	Zero output: the voltage to the piezo's will be set to zero.
3	Encoder error. Please contact Xeryon's customer service for assistance.
4	The voltage to the piezo's is zero.
5	The "position reached" LED will light up when the desired position is reached.
6	Click on this button to compensate the radial error motion of the XRT-A[2]. The green LED "active" will light up when the radial error motion compensation is active.
7	Reset the settings and driver.
8	Run automatically the selected program. The green LED "Program running" will light up when the program is running. Via the browse button, one can search and select the program that is being executed (.txt file). Remark: the ASCII commandos to write the write the program are described in the manual of the XD-S driver.
9	Set the step size in degrees for when you press the "Step -RX" and "Step +RX" button.
10	Set the desired position in degrees.
11	The stage stops moving when you click the "Stop" button.
12	The stage will continuously move in the -RX direction.
13	Move to the index position.
14	Desired position.
15	Actual position.

[2] Only on the AC-version (XRT-A with active error motion compensation).

5. Specifications and dimensions

Parameter	Specification
Load capacity	1 N (100 g)
Travel range	Unlimited (bidirectional)
Encoder resolution	6.25 m° (57600 positions/turn)
Dimensions	40 x 31 x 15 mm
Velocity	+/- 2 rev/min (prop. to driving frequency and amplitude)
Operating voltage (piezo actuators)	0 – 46 V (0 – 2.5 kHz)
Mass	55 g
Operating temperature	+10 to +30 °C
Operating pressure	Ambient pressure or vacuum[3] (10-6 mbar)
Magnetic field	Max. 1.5 Tesla[4] (static field)
Radial error motion (in the direction of compensation)	0.5 µm
Axial error motion	0.5 µm
Tilt (wobble)	50 µrad

The error motion of each stage is measured individually and the error motion data and graphs are included with the stage at delivery.

<u>Remark:</u> screws (4x M2) may not be inserted deeper than 2.5 mm into the rotor. Screwing them deeper may damage the encoder.

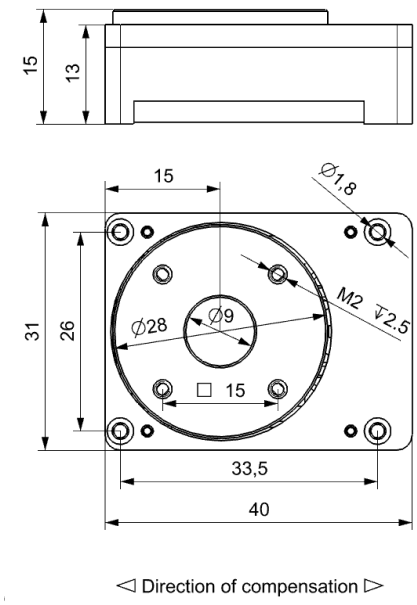

Figure 2: Dimensions and mounting interface of the XRT-A

[3] Only for the HV-version.
[4] Only for the NM-version.

6. DON'Ts

- Do not disassemble the stage.
- Do not soak the device in any fluid, not for cleaning, not for lubrication, not for whatever reason.
- Do not lubricate the stage with oil or grease.
- Do not overload the stage.
- Do not move or slide your sample or object over the top plate of the stage without lifting the load. Overcome excessive forces on the stage while screwing bolts in the top plate.
- Do not drill holes or mill features in the stage. You would probably damage the device by either touching the internal components or by chips and dust entering the bearing. Instead, take contact with Xeryon's customer service.
- Do not apply negative voltages to the piezos.

Contact Xeryon's customer service when you have any question regarding the proper use of the stage.

7. Trouble shooting

When experiencing problems with the XRT-A, the following trouble shooting tips may help. If the problem persists, please contact Xeryon's customer service.

- Device makes noise.
  Noise is inherent to the operation of this actuator. A saw tooth driving signal of for instance 2 kHz will produce a fundamental tune of 2 kHz and many harmonics. Clicks can be heard when suddenly altering the voltage across the piezo, when switching on or off the device. However, no scratching noises should be heard. In that case, contact Xeryon.
- Motor does not respond, no noise, no motion.
  Check wiring. Measure capacitance of piezo to check internal wiring of device. This value should be around the value as specified in paragraph 7. The piezo may still be charged and disturb the measurement. Discharge the piezo over a resistor prior to the measurement.
- Motor does not respond, makes noise but no motion.
  The load or its rotational inertia may be too high. In that case, the motor will also slip during the slow part of the saw tooth. Reduce the rotational inertia or reduce the frequency of the saw tooth.
- Motor rotates, but encoder does not produce any output.
  Check wiring to and from encoder. Check presence of A/B encoder signals with a scope (or multimeter). A red light produced by the encoder should be visible through the gap between rotor and the top side of the body.
- Motor rotates, but encoder does produce unreliable or erratic output.
  Check wiring to and from encoder. Check A/B encoder signals with a scope. In case of noise, shield flat cable from electromagnetic interference, and/or employ filtering on A/B signals.
- Rotor moves always to the same position.
  If the table axis is not vertical, the load is probably eccentric and the resulting torque is too high for the motor.
- Erratic motion.
  The phases of stick and slip are probably not nicely distinct. The saw tooth frequency may be too high, therefore try a lower frequency. Another possibility is that the rise or fall time for the slip phase is too long. Use an amplifier with sufficiently high slew rate, e.g. Xeryon's X-Driver.
- Rotor not parallel to stator bottom, tilted.
  In certain versions, the rotor can tilt slightly when axially overloaded. Do not operate the actuator in this situation. Remove the load and push/pull the rotor gently back, until it snaps back into place.

Tip: To verify the operation of the encoder, the rotor can be rotated manually.

8. Ordering code

XRT-A - S – AC – A – NM (example code)

<u>Material option:</u>

- NM: non-magnetic
- NA: non-anodized

<u>Atmosphere:</u>

- A: normal atmosphere
- HV: high vacuum (10-6 mbar)

<u>Error motion compensation:</u>

- AC: active compensation
- NC: no compensation

<u>Sensor resolution:</u>

- S: 6.25 m°

9. Customer service

Phone: +32 (0)16 39 48 24
Address: Interleuvenlaan 62, 3001 Leuven, Belgium
Contact: info@xeryon.com
Website: www.xeryon.com