XRT-A-25-109

Compact rotation stage with nanometer error motion

Compact and ultra-precise piezoelectric rotary stage with an extremely small error motion and large aperture. This makes the XRT-A suited for a broad range of precision positioning applications or for state-of-the-art vacuum and non-magnetic applications like micro and nano-CT scanners, X-ray diffraction systems, electron microscopy and synchrotron applications. The stage can be equipped with active compensation technology to further reduce the radial error motion to less than 0.5 µm. Stacking onto a Xeryon linear stage is easily done with available interface plates.

Key features

drive principle	stick-slip piezo motor
bearings	integrated drive concept
lifetime	> 100000 rev.
control principle	closed-loop position control
operating voltage	20 to 48 V

Model code structure

stage type	approx. rotor diameter (mm)	encoder resolution (µrad)	optional		
			active error motion compensation*	vacuum compatibility (10^{-6} mbar)	non-magnetic materials**
XRT-A	-25	-109	-AC	-HV	-NM

* in radial direction and in one plane with respect to stator (see drawing)

** titanium rotor (Ti-6Al-4V) and stainless steel bolts (A2/A4)

Environmental compatibility

temperature range	-30°C to +70°C
humidity range	20% to 90% RH (non-condensing)
heat dissipation (motor only)	< 1 W
mounting surface flatness	< 5 µm

Motion performance

			XRT-A-25-109	XRT-A-25-109-AC	unit	tolerance
ENCODER		type	optical, incremental			
		counts per rev.	57600			
		resolution	109 22.5 6250		µrad arcsec µ°	
		index	1 per rev.			
		accuracy	± 0.017		%	typ.
STAGE	positioning	resolution = min. step size = min. incremental motion (MIM)	125 25 7100		µrad arcsec µ°	typ.
		unidirectional repeatability	± 125 ± 25 ± 7100		µrad arcsec µ°	typ.
		bidirectional repeatability	± 250 ± 50 ± 14200		µrad arcsec µ°	typ.
	speed	max. speed	12		°/s	typ.
		min. speed	0.012		°/s	typ.
		stability	1		%	typ.
		point-to-point positioning time* 0 kgmm² inertia 1 kgmm² inertia	300 500		msec msec	typ.
	error motion (p-p)	radial at 7 mm above top surface	1	0.5	µm	max.
		axial in centre	0.5		µm	max.
		tilt (wobble)	50		µrad	max.

* for a 1° step and settling within bidirectional repeatability range

Note: a detailed description of the technical terms used in this datasheet can be found on the Terminology page of our website.

Mechanical properties

		XRT-A-25-109	XRT-A-25-109-AC	unit	tolerance
dimensions		40 x 31 x 15		mm	± 0.1
rotor diameter		28		mm	± 0.1
aperture		9		mm	± 0.1
mass (w/o connector)		55		g	± 5%
load capacity (payload limitation)	inertia mass*	8 0.1		kgmm² kg	max.
load capacity (bearing force limitation)	axial radial tilt	1 0.5 6		N N mNm	max.
holding torque		4		mNm	min.
driving torque		4		mNm	min.
stage material	rotor housing	stainless steel AISI316L or titanium Ti-6Al-4V (-NM) anodised aluminium			
cable length**		1.5		m	± 0.1
connector (stage to controller)		1x 15-pin D-sub HD male			

* assuming a solid cylindrical payload of dia. 25.4 mm

** extension cables available or shorter cable on request

Controller/software

The XRT-A rotation stage is compatible with all Xeryon controllers. Controlling of the stage is done with:

- Easy-to-use Windows interface
- LabVIEW interface program (compiled program or source)
- MATLAB interface script
- C++ and Python libraries

Drawing

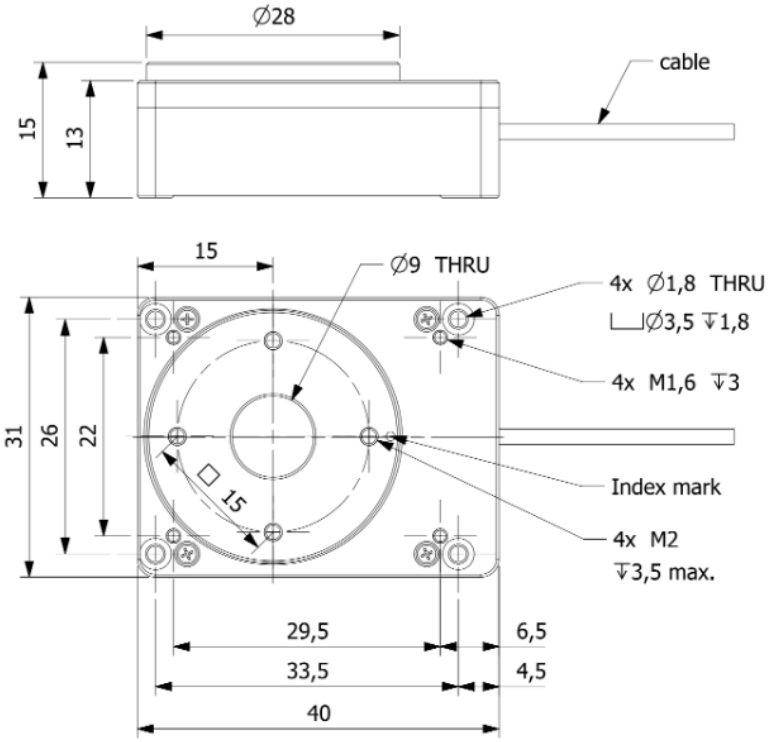

	max. tightening torque
M1,6	16 cNm
M2	34 cNm

recommended flatness of mounting surfaces: 5 µm max.

Measurement data

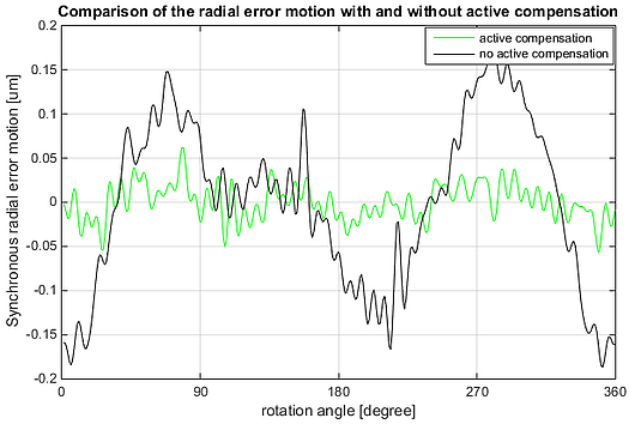

Typical measurement of the synchronous radial error motion of an XRT-A-25-109-AC rotation stage without active compensation (360 nm p-p); and with active compensation (110 nm p-p).

Last updated: 09/04/2024. All specifications are subject to change without prior notice.